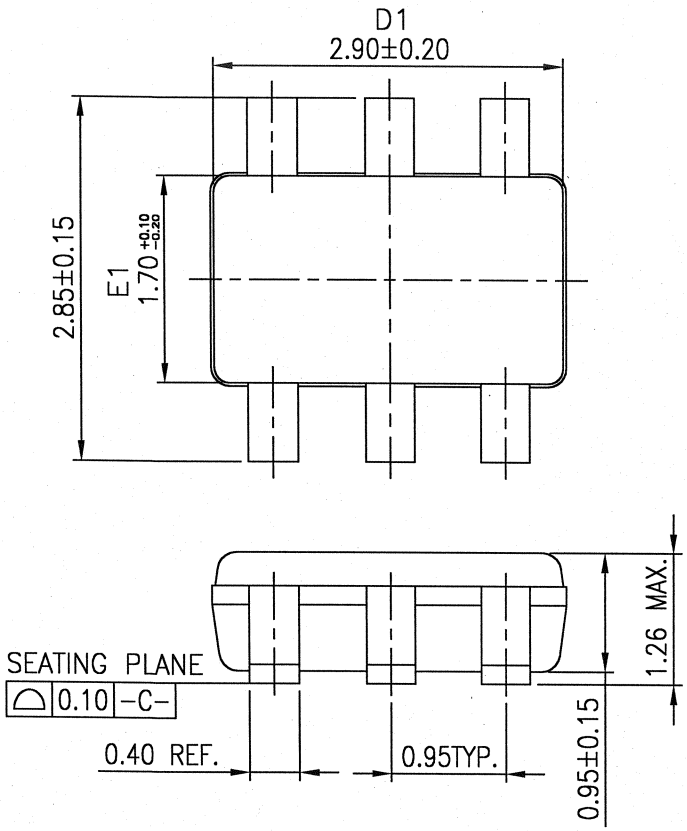

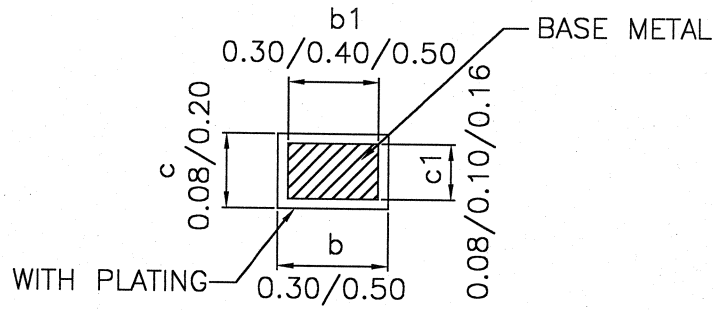

SECTION "B"–"B"

NOTES:

1. DIMENSION D1 & E1 DOES NOT INCLUDE MOLD PROTRUSION.
2. COPLANARITY OF ALL LEADS SHALL BE (BEFORE TEST) 0.1 MAX. FROM THE SEATING PLANE. UNLESS OTHERWISE SPECIFIED.
3. GENERAL PHYSICAL OUTLINE SPEC IS REFER TO TMC'S FINAL VISUAL INSPECTION SPEC UNLESS OTHERWISE SPECIFIED.

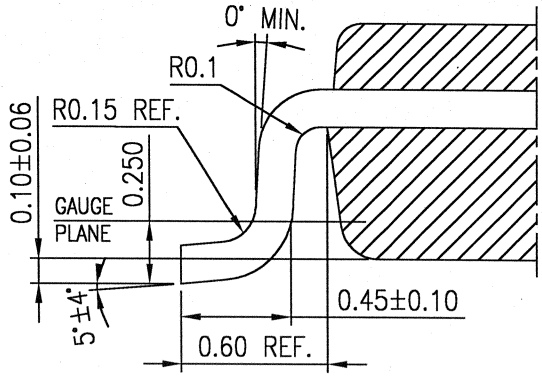

DETAIL "A" (S=32:1)

REV.	DESCRIPTION OF REVISION	SIGNATUBE/ DATE
3		
2	MODIFY DIM.	JANE LIOU. 90/12/24
1	MODIFY DIM.	89/09/22

晶揚科技股份有限公司
Taiwan Micropaq Corporation

TITLE: SOT 26 PACKAGE OUTLINE DWG.

DWG. NO. EOL–A0060000–001 R2

FILE EOLA6–001

DESIGNER	DATE	MATERIAL	SCALE
JANE LIOU.	90/12/24		16 : 1
CHECKER	DATE	PROCESSES	SHEET NO. 1 OF 1
APPROVED	DATE	UNIT MM	

THIRD ANGLE PROJECTION

.XXXX ±.005
.XXX ±.025
.XX ±.100
.X ±.250

ALL DIMENSIONS IN MILLIMETERS.