TMD40N10D

N-SGT ENHANCEMENT MOSFET

General Description

The TMD40N10D uses advanced trench technology to provide excellent $R_{DS(ON)}$, low gate charge and operation with gate voltages as low as 2.5V. This device is suitable for use as a Battery protection or in other Switching application.

Product Summary

V_{DS} = 100V I_D = 40A

$R_{DS(ON)}$ < 20mΩ @ V_{GS}=10V

$R_{DS(ON)}$ < 26mΩ @ V_{GS}=4.5V

100% UIS Tested
100% R_g Tested

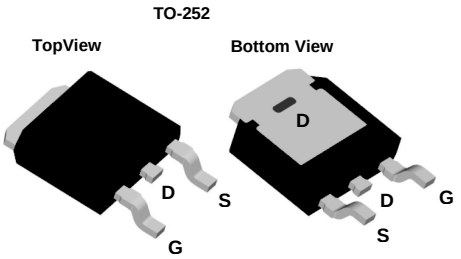

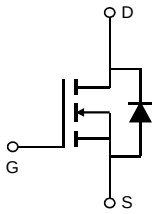

Absolute Maximum Ratings at T_j=25℃ unless otherwise noted

Parameter	Symbol	Value	Unit
Drain source voltage	VDS	100	V
Gate source voltage	VGS	±20	V
Continuous drain current[1)], T_C=25 ℃	ID	40	A
Pulsed drain current[2)], T_C=25 ℃	ID, pulse	120	A
Power dissipation[3)], T_C=25 ℃	P_D	72	W
Single pulsed avalanche energy[5)]	EAS	30	mJ

© 2018 Tritech-MOS Technology Corporation

Operation and storage temperature	Tstg，Tj	-55 to 150	℃

Thermal Characteristics

Parameter	Symbol	Value	Unit
Thermal resistance, junction-case	RθJC	1.74	℃/W
Thermal resistance, junction-ambient[4)]	RθJA	62	℃/W

Electrical Characteristics at T_j=25 ℃ unless otherwise specified

Parameter	Symbol	Test condition	Min.	Typ.	Max.	Unit
Drain-source breakdown voltage	BV_{DSS}	V_{GS}=0 V, I_D=250 μA	100			V
Gate threshold voltage	$V_{GS(th)}$	V_{DS}=V_{GS}, I_D=250 μA	1.0		2.5	V
Drain-source on-state resistance	$R_{DS(ON)}$	V_{GS}=10 V, I_D=8 A		16	20	mΩ
Drain-source on-state resistance	$R_{DS(ON)}$	V_{GS}=4.5 V, I_D=6 A			26	mΩ
Gate-source leakage current	I_{GSS}	V_{GS}=20 V			100	nA
					-100	
Drain-source leakage current	I_{DSS}	V_{DS}=100 V, V_{GS}=0 V			1	μA
Input capacitance	Ciss	V_{GS}=0 V, V_{DS}=50 V, f=1 MHz		1190.6		pF
Output capacitance	Coss			194.6		pF
Reverse transfer capacitance	Crss			4.1		pF
Turn-on delay time	td(on)	V_{GS}=10 V, V_{DS}=50 V, R_G=2.2 Ω, I_D=10 A		17.8		ns
Rise time	t_r			3.9		ns
Turn-off delay time	td(off)			33.5		ns
Fall time	t_f			3.2		ns
Total gate charge	Q_g	I_D=8 A, V_{DS}=50 V, V_{GS}=10 V		19.8		nC
Gate-source charge	Q_{gs}			2.4		nC
Gate-drain charge	Q_{gd}			5.3		nC
Gate plateau voltage	$V_{plateau}$			3.2		V
Diode forward current	I_S	V_{GS}<V_{th}			40	
Pulsed source current	I_{SP}				120	A
Diode forward voltage	V_{SD}	I_S=8 A, V_{GS}=0 V			1.3	V
Reverse recovery time	t_{rr}	I_S=8 A, di/dt=100 A/μs		50.2		ns
Reverse recovery charge	Q_{rr}			95.1		nC
Peak reverse recovery current	I_{rrm}			2.5		A

© 2018 Tritech-MOS Technology Corporation

Electrical Characteristics Diagrams

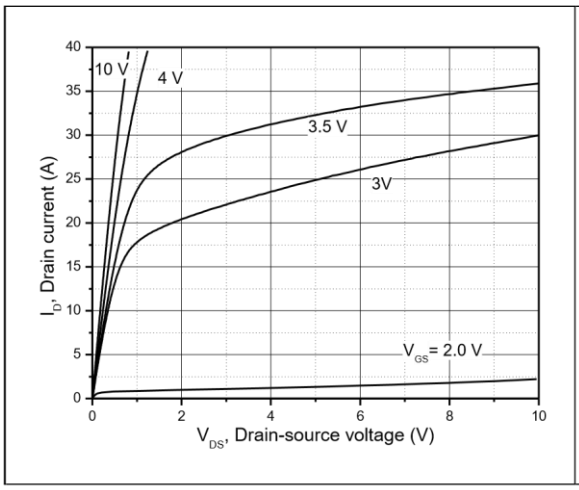

Figure 1, Typ. output characteristics

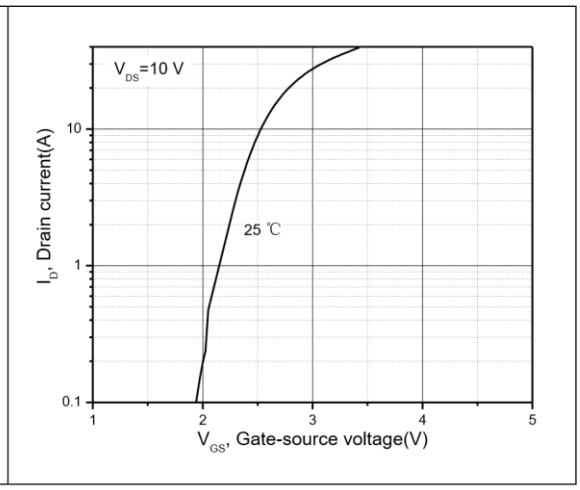

Figure 2, Typ. transfer characteristics

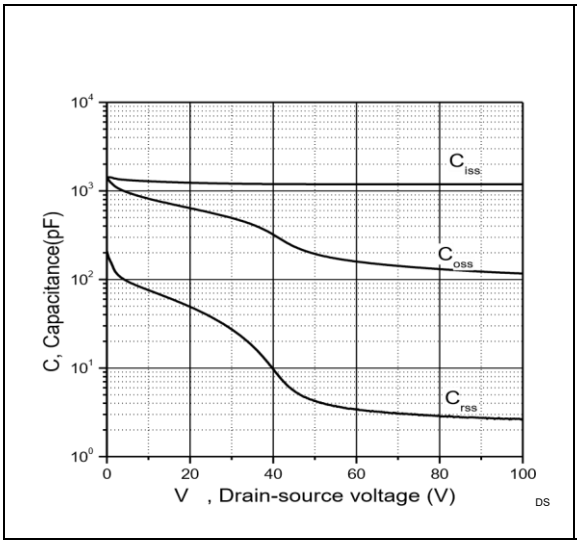

Figure 3, Typ. capacitances

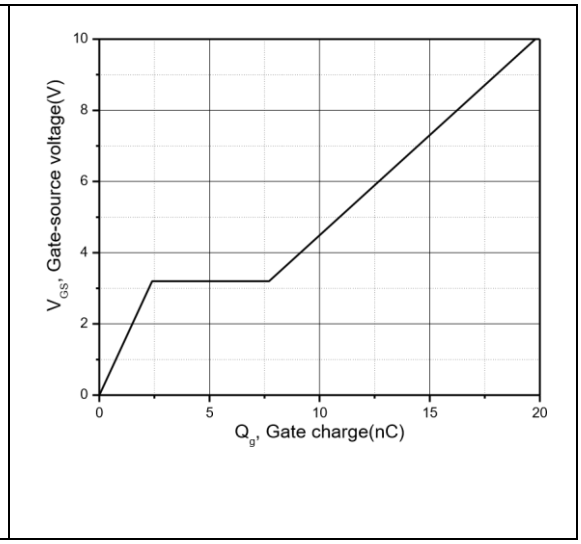

Figure 4, Typ. gate charge

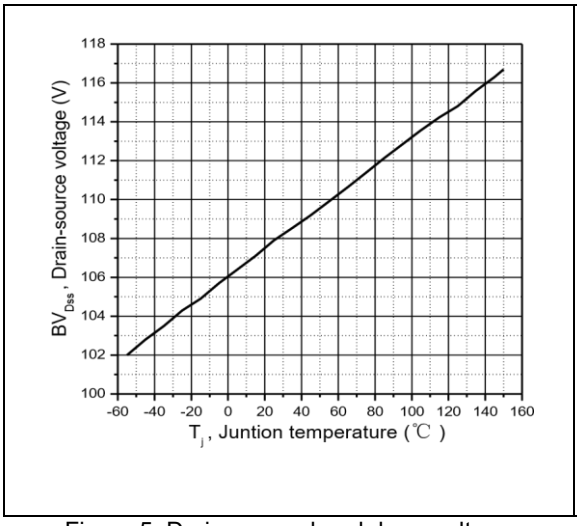

Figure 5, Drain-source breakdown voltage

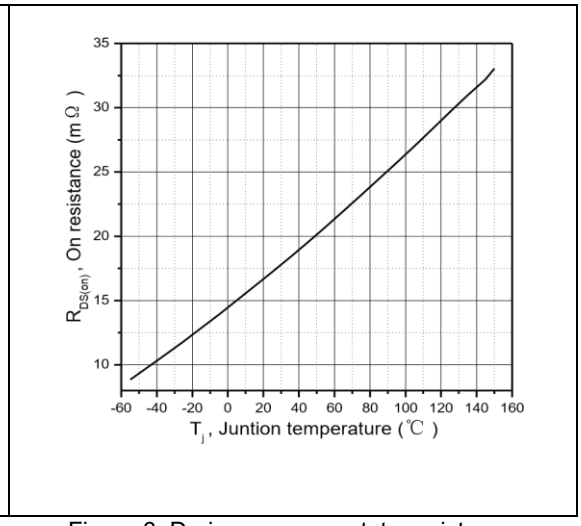

Figure 6, Drain-source on-state resistance

© 2018 Tritech-MOS Technology Corporation

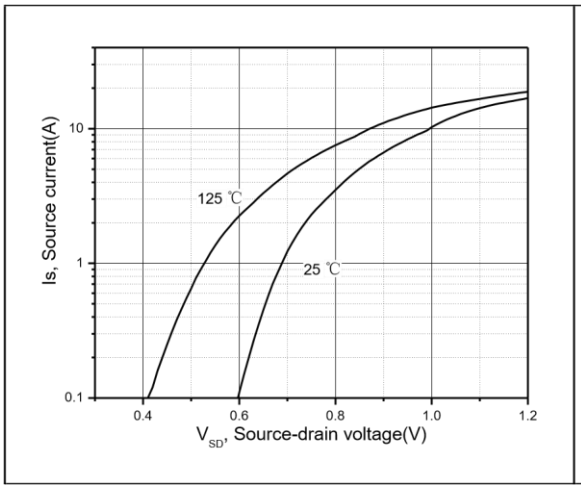

Figure 7, Forward characteristic of body diode

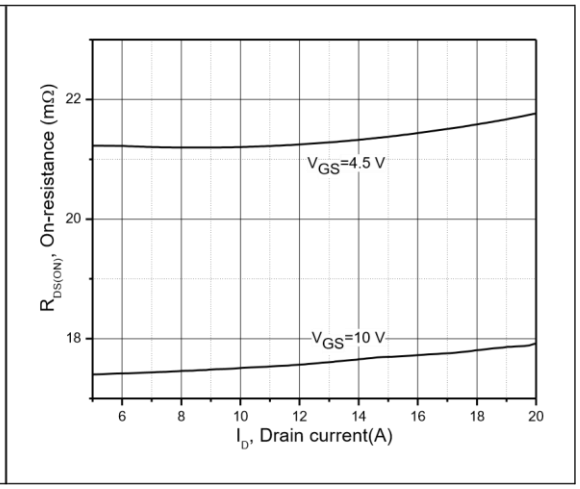

Figure 8, Drain-source on-state resistance

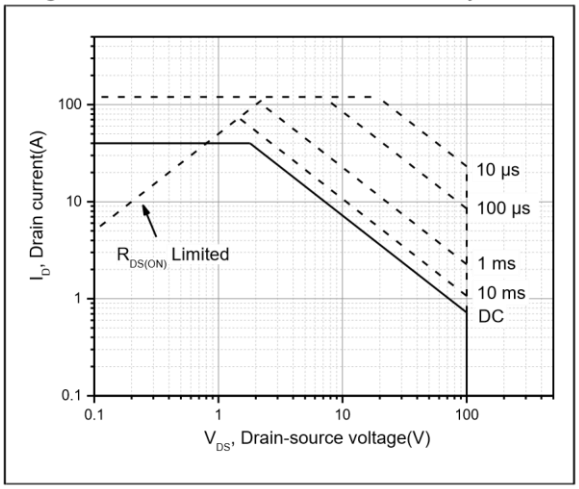

Figure 9, Safe operation area T_C=25 ℃

Test circuits and waveforms

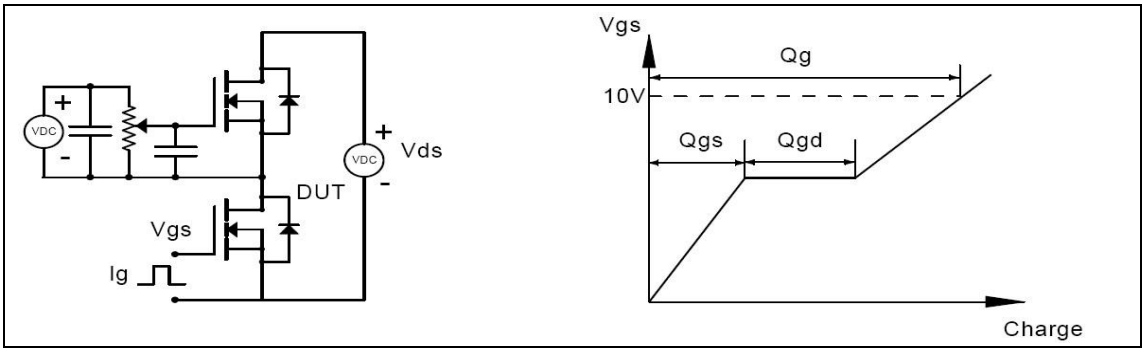

Figure 1, Gate charge test circuit & waveform

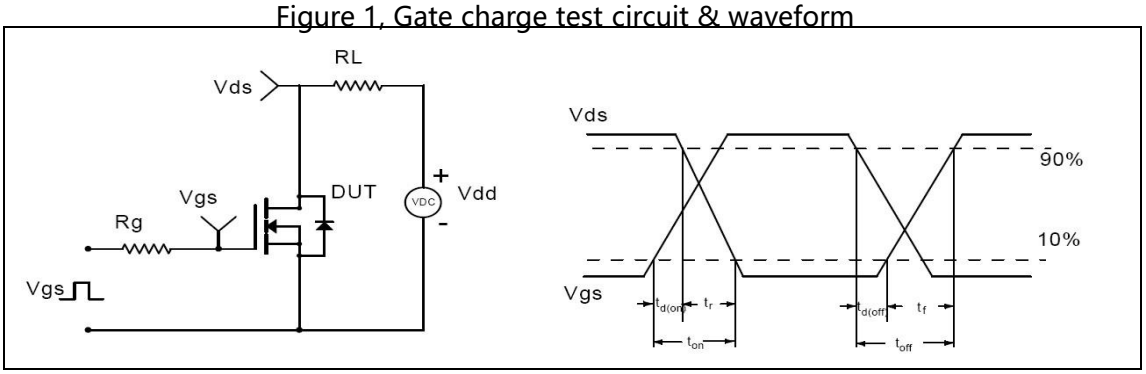

Figure 2, Switching time test circuit & waveforms

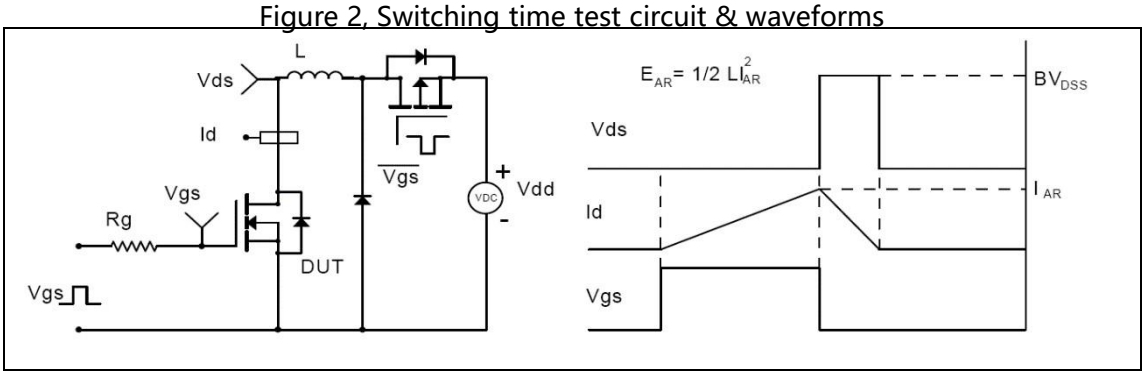

Figure 3, Unclamped inductive switching (UIS) test circuit & waveforms

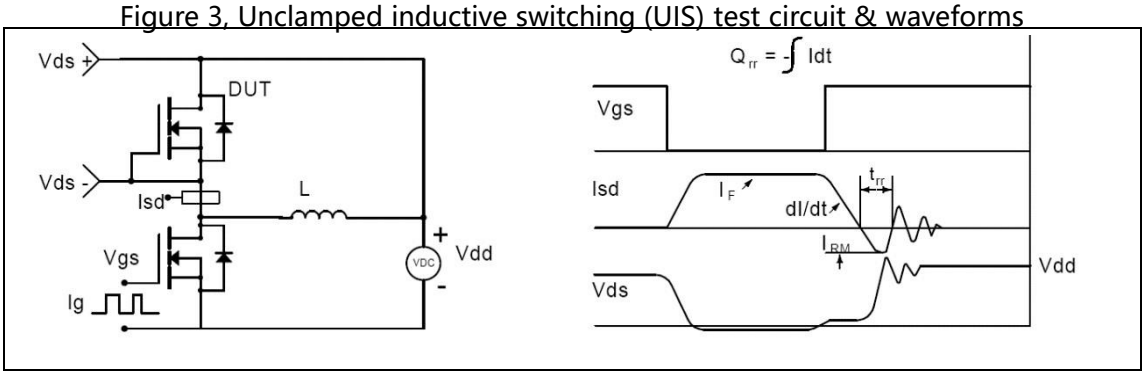

Figure 4, Diode reverse recovery test circuit & waveforms

TO-252 Package Information

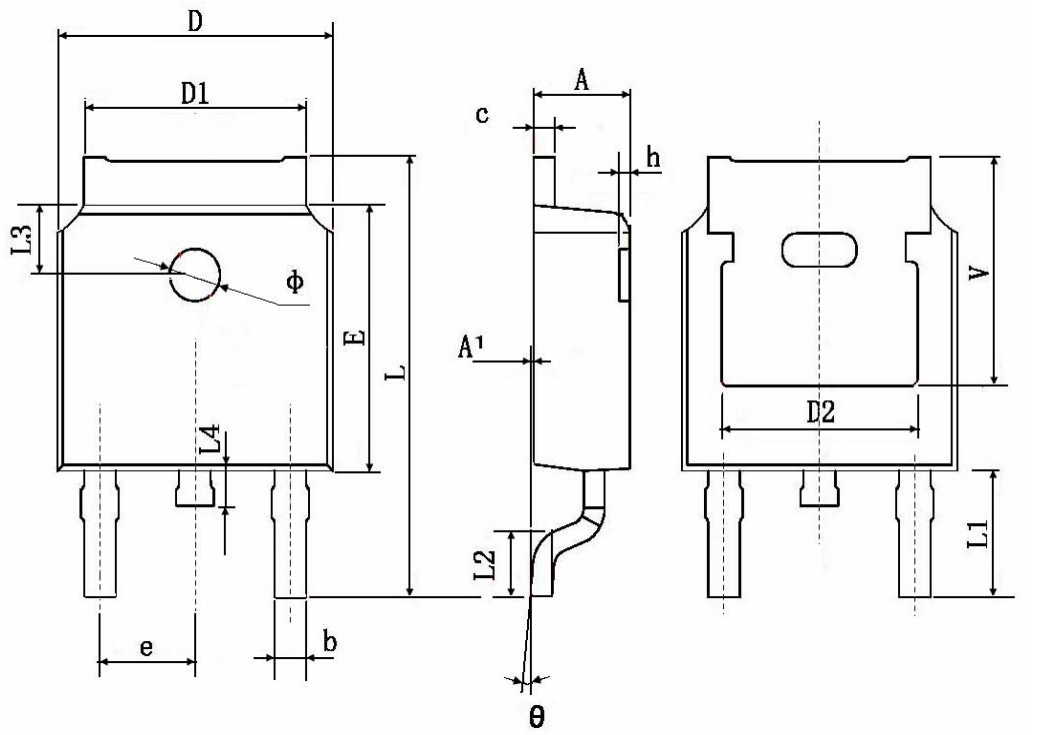

Symbol	Dimensions In Millimeters		Dimensions In Inches	
	Min.	Max.	Min.	Max.
A	2.200	2.400	0.087	0.094
A1	0.000	0.127	0.000	0.005
b	0.660	0.860	0.026	0.034
c	0.460	0.580	0.018	0.023
D	6.500	6.700	0.256	0.264
D1	5.100	5.460	0.201	0.215
D2	4.830 TYP.		0.190 TYP.	
E	6.000	6.200	0.236	0.244
e	2.186	2.386	0.086	0.094
L	9.800	10.400	0.386	0.409
L1	2.900 TYP.		0.114 TYP.	
L2	1.400	1.700	0.055	0.067
L3	1.600 TYP.		0.063 TYP.	
L4	0.600	1.000	0.024	0.039
Φ	1.100	1.300	0.043	0.051
θ	0°	8°	0°	8°
h	0.000	0.300	0.000	0.012
V	5.350 TYP.		0.211 TYP.	

© 2018 Tritech-MOS Technology Corporation